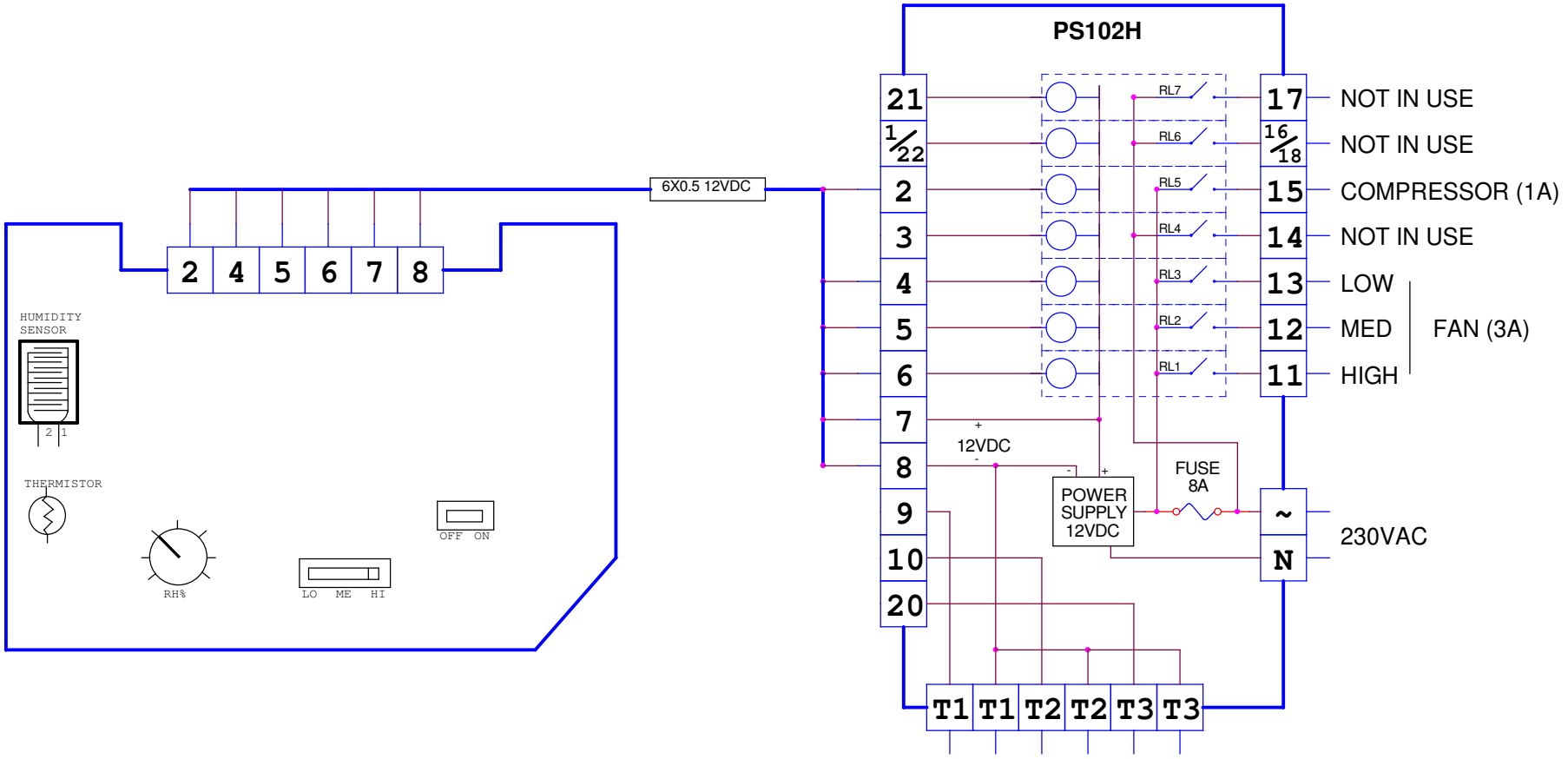

meitav-tec
Tel: 03-9626462 Fax: 03-9626620
email: support@meitavtec.com

Title: ERHU55 (PS102H)

Date: 22/12/2004 DWG No. 150542

No.	Revision	Date

Print name: ---	Drawn: Piki
Software name: ---	Checked: --
Check sum: ---	Approved: Israel
File name: ERHU55+PS102H.DSN	